BW-BE 1-A
Mounting Bracket

- Adjustable
- Robust design

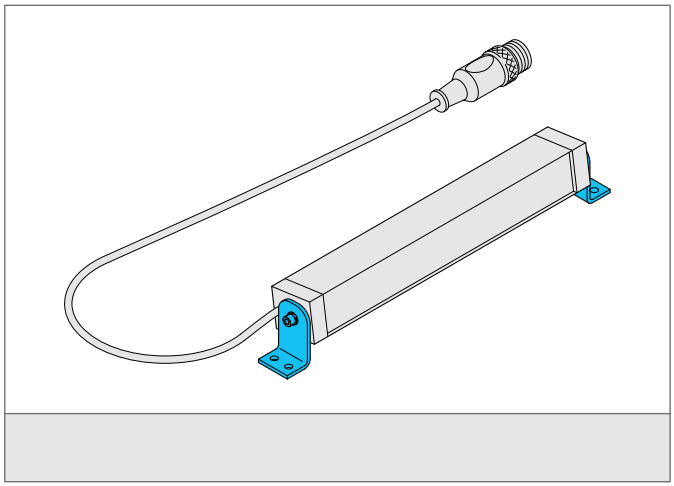

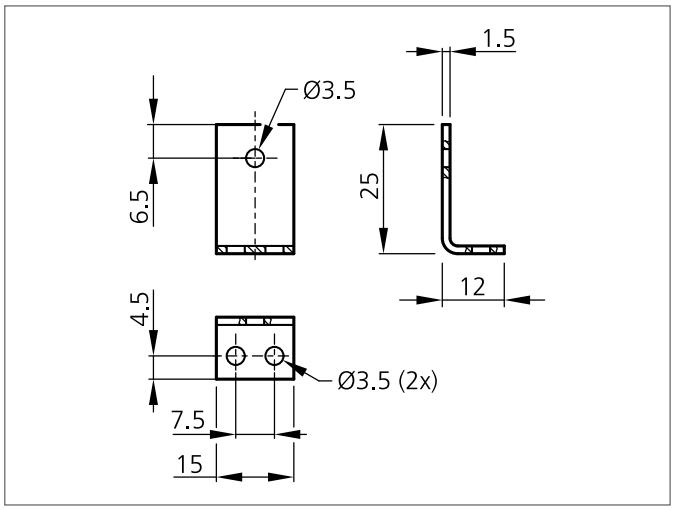

TECHNICAL INFORMATION (typ.)	
Mounting hole	Ø 3,5 mm
Casing material	stainless steel